# Absolute-pressure sensors

## Micromechanical hybrid design

Input quantity: P
Output quantity: U

- High level of accuracy
- EMC protection better than 100 V $m^{-1}$.
- With temperature compensation.
- Version with additional integrated temperature sensor.

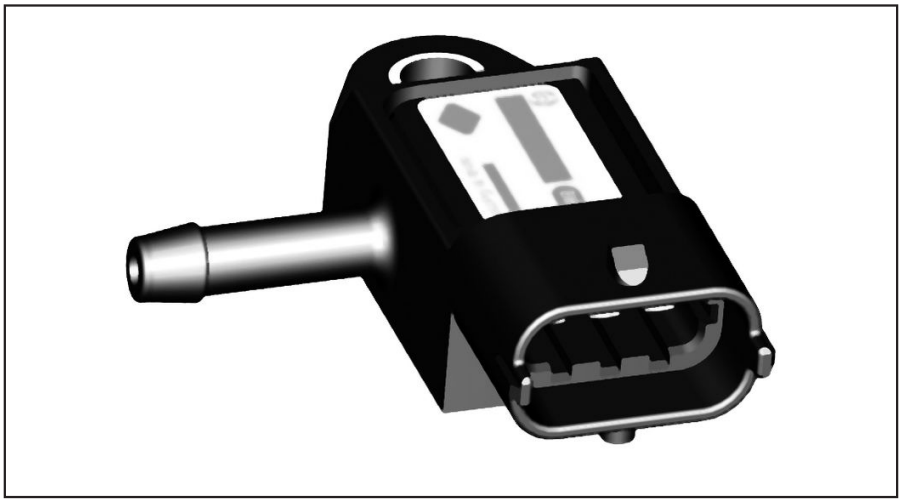

### Application

This sensor is used to measure the absolute intake-manifold pressure. The version with integrated temperature sensor additionally measures the temperature of the intake-air flow.

### Design and operation

The piezo-resistive pressure-sensor element and appropriate signal amplification and temperature compensation electronics are integrated on a silicon chip.
The measured pressure acts from above on the active side of the silicon diaphragm. A reference vacuum is enclosed between the rear side and a glass base. The temperature-sensor element is an NTC thermistor. Thanks to an appropriate coating method, the pressure and temperature sensor are resistant to the gases and liquids occurring in the intake manifold.

### Installation instructions

The sensor is designed for attachment to a flat surface at the intake manifold of motor vehicles. The pressure connection and the temperature sensor jointly project into the intake manifold and are sealed off from the atmosphere by an O-ring. The sensor should be installed in the vehicle such that condensate cannot accumulate in the pressure cell (pressure sampling point at top of intake manifold, pressure connection angled downwards etc.).

### Explanation of characteristic quantities

$U_A$ Output voltage $U_V$Supply voltage $k$ Tolerance multiplier DAfter endurance test NAs-new condition

Robert Bosch GmbH
Automotive Aftermarket
Postfach 410960
76225 Karlsruhe
Germany

www.bosch-sensoren.de

BOSCH
Invented for life

BOSCH
Invented for life

# Part number 0 281 002 593

## Technical data

| Parameter | min | type | max | | |
|---|---|---|---|---|---|
| Pressure range kPa ($p_1$...$p_2$) | | | 20 | | 250 |
| Operating temperature | $\vartheta_B$ | °C | -40 | | +130 |
| Supply voltage (1 min) | $U_V$ | V | 4,75 | 5 | 5,25 |
| Current input at $U_V$ = 5 V | $I_V$ | mA | 6 | 9 | 12,5 |
| Load current at output | $I_L$ | mA | -1 | | 0,5 |
| Load resistance to $U_V$ or ground | $R_{pull\text{-}up}$ | kΩ | 5 | | |
| Load resistance to $U_V$ or ground | $R_{pull\text{-}down}$ | kΩ | 10 | | |
| Response time | $\tau_{10/90}$ | ms | | | 1 |
| Voltage limitation at $U_V$ = 5 V - lower limit | | V | 0,25 | 0,3 | 0,35 |
| Voltage limitation at $U_V$ = 5 V - upper limit | | V | 4,75 | 4,8 | 4,85 |

**Limit data**

| | | | | |
|---|---|---|---|---|
| Supply voltage | $U_{V\,max}$ | V | | 16 |
| Storage temperature | | °C | -40 | +130 |

**Temperature sensors**

Accessories are not included in the scope of delivery of the sensor and are therefore to be ordered separately as required.

## Dimensional drawing

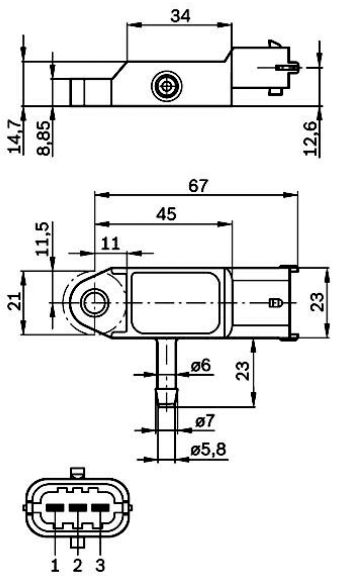


Pin 1 +5 V
Pin 2 Ground
Pin 3 Output signal

## Characteristic curve

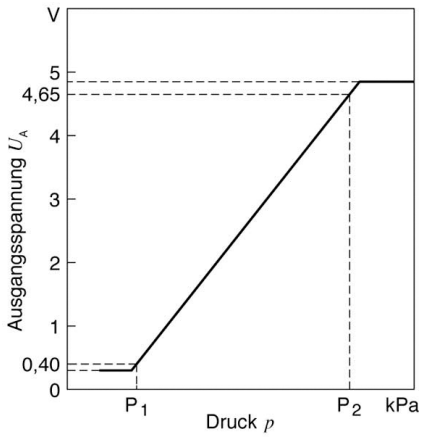

BOSCH
Invented for life

## Characteristic-curve tolerance

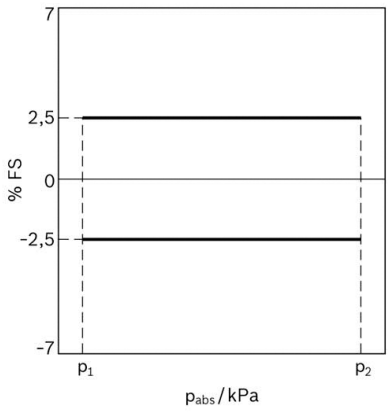


## Tolerance extension factor

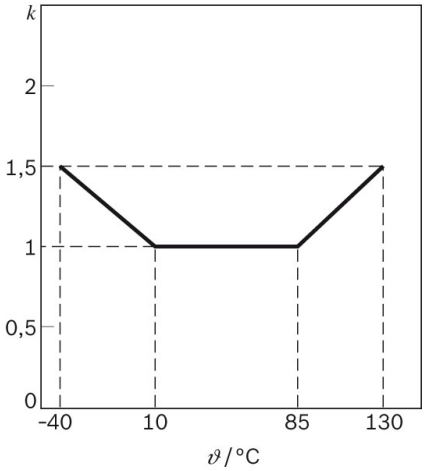


## Characteristic curve for temperature sensor

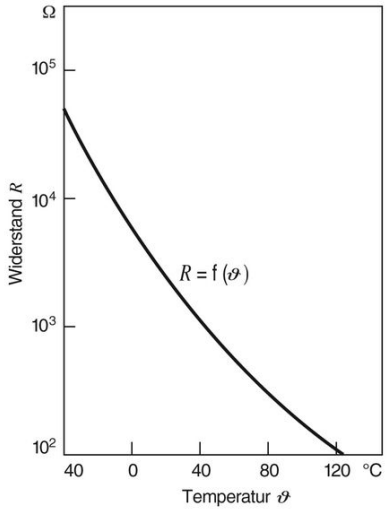


Applies to products with integrated temperature sensor.

## Section through pressure sensor

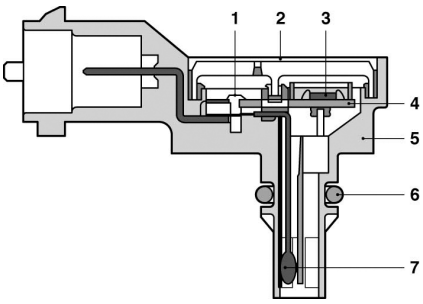


1 Bond
2 Cover
3 Sensor chip
4 Ceramic substrate
5 Housing with pressure-sensor connection
6 Seal 7NTC element.

## Section through sensor cell

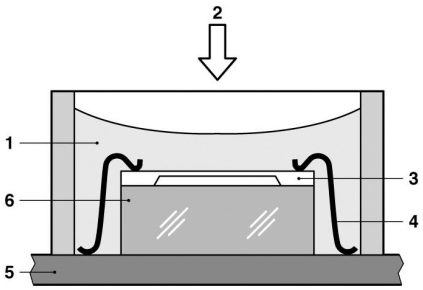


1 Protective gel
2 Pressure
3 Sensor chip
4 Bond
5 Ceramic substrate
6 Glass base.

## Recommendation for signal evaluation.

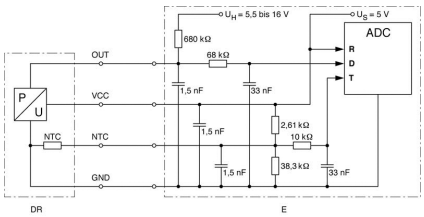


R Reference
D Pressure signal
T Temperature signal
Dr Pressure sensor
E Electronic control unit

| Accessories | | Part number |
|---|---|---|
| Connector housing | Quantity required: 1 x | 1 928 403 966 |
| Contact pins | Quantity required: 3 x; Contents: 100 x | 1 928 498 060 |
| Individual seals | Quantity required: 3 x; Contents: 10 x | 1 928 300 599 |

Accessories are not included in the scope of delivery of the sensor and are therefore to be ordered separately as required.